MyAmplifiers

+(44)1414160557
contact@myamplifiers.com
myamplifiers

FREE SUPPORT | CE FC | 2 YEARS WARRANTY | 30 DAYS MONEYBACK | 5-7 DAY DELIVERY

AnyTone AT6100GD

Product Description

The dualband repeater is designed to improve mobile signals at two different frequencies simultaneously. It □□ suitable fo**European and other mobile providers** working at GSM **900 MHz** frequency and **1800 MHz** as additional one. This Dual Band model is used for locations like spacious houses, offices, parking lots, etc. with area coverage of about **600 m^2 (6500 ft^2)**.

The model intensifies **mobile voice connections** and stabilize work of GPRS and EDGE networks efficiently.

AnyTone AT6100 repeater is provided with the international **CE and RoHS certifications** and a two-year warranty. Corrrespondingly, the device satisfies all the requirements of the modern technical standards.

Order AT6100GD right now and enjoy talking on the phone with different providers without interruptions!

Product Features

- Indoor coverage – 600m2
- Frequency bandwidth of 900/1800 MHz
- Safety for Human Health
- Conformity to CE and RoHS standarts
- 2-YEAR Warranty
- Full duplex mode (improvement of outcoming and incoming signal)

Package

- AT6100 GD repeater,
- inside antenna + 5m cable
- outside antenna + 10m cable,
- power supply,
- manual (read

Specification

Indoor coverage	600 m2

Up-link freq	890-915MHz & 1710-1785 MHz
Down-link freq	935-960MHz & 1805-1880 MHz
Up-link Gain	60 dB
Down-link Gain	70 dB
Power supply	AC 220V/110V/200mW
Working t^{o}C	-25 - +55 C
Humidity	5-95
Size (mm)	359x204x48
Booster Weight	3.5 kg
dBm	23 kg

Installation Scheme

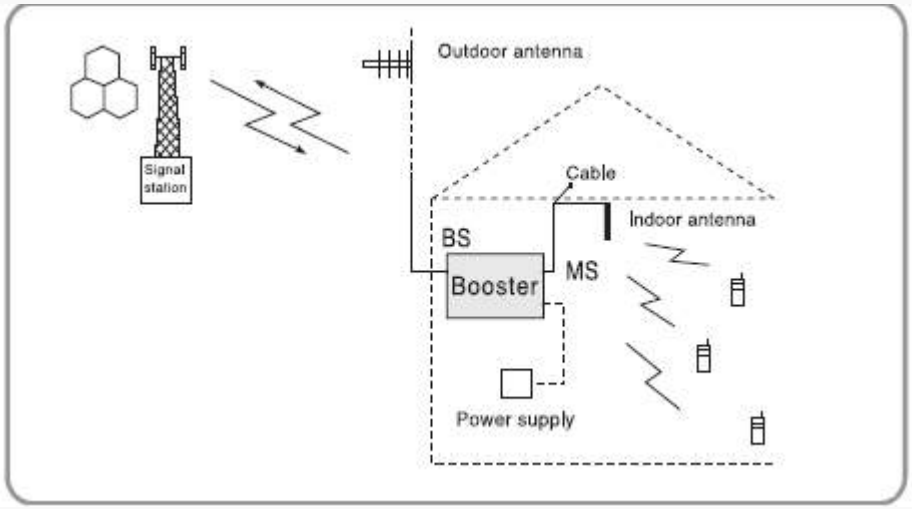

Installation Guide

1. Encuentre la mejor posición para la antena exterior (en el tejado o fuera de la ventana donde se captan por lo menos 2-3 rayas de la cobertura móvil). Elija la mejor dirección para la antena – se recomienda dirigirla hacia la torre repetidora más cercana de su operador móvil. No monte la antena exterior cerca de antenas de alta frecuencia, redes de metal, cables de alta tensión o transformadores. No se olvide de proteger la antena de tormentas o rayos.
2. Plug the in-car antenna into the repeater surface and tighten it.
3. Open the back carriage of the vehicle to mount the out-of-car antenna. Loosen two screws of the mounting for out-of-car antenna, then embed the mounting into the cover of the back carriage and tighten well.
4. Plug the out-of-car antenna into the repeater surface and fasten the screws.
5. Plug the equipment into the cigar lighter. The indicator starts lighting which means that the mobile repeater works normally. If you don't need to use the mobile repeater, unplug it from the cigar lighter.

If you have any questions regarding placing an order, installation or other issues, please, contact us –

Phone: +(33)977215553
E-mail: contact@myamplifiers.com
Skype: gsm_amplifier